TKHD series

Heavy duty cable carriers for long travel lengths and high additional loads

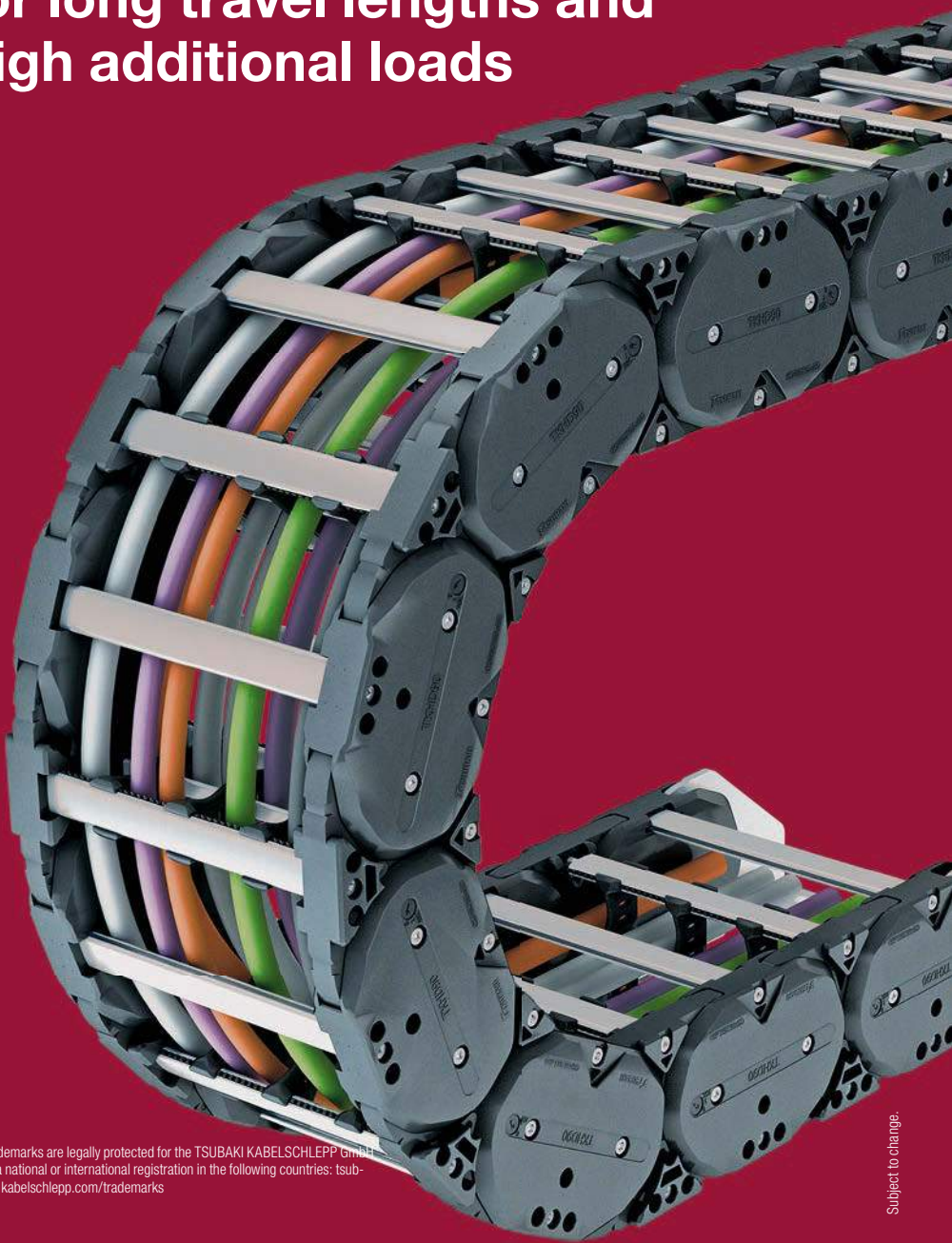

Trademarks are legally protected for the TSUBAKI KABELSCHLEPP GmbH as a national or international registration in the following countries: tsubaki-kabelschlepp.com/trademarks

Subject to change.

TKHD series | Overview

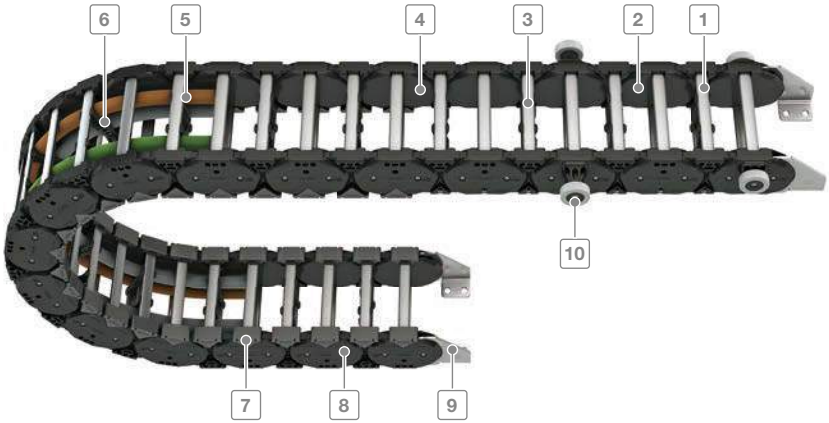

1 Aluminum stays available in **1 mm width sections**

2 Plastic chain link plates

3 Quick and easy opening to the inside or outside for cable laying

4 Cable-friendly interior – no interfering edges

5 Fixable dividers

6 Dividers and subdivision for separating the cables

7 Replaceable glide shoes for increased service life in gliding application

8 Robust, multiple stop system

9 Steel installation brackets

10 RSC-system (roller supported system)

Inner heights

87

Inner widths

100 – 800

tsubaki-kabelschlepp.com/tkhd

Features

- Massive, enclosed, stain-repellend stop system
- Massive sidebands through robust double fork-bracket-construction
- Sidebands easy to assemble
- Reinforced pin bore connection
- Integrated noise damping
- Quick and easy opening to the inside or outside for cable laying
- Soil-resistant outer contour
- Easy change of components
- Maintenance-free
- Symmetrical force curve in the sideband
- Quiet and low-wear operating through polygon-optimized contour and radii

Variable vertical and horizontal inner distribution optional with fixable dividers

Suitable also for roller-mounted application (RSC)

Replaceable glide shoes for longer service life in gliding applications

Subject to change.

TKHD series | Overview

Type	Opening variant	Stay variant	h_i [mm]	h_G [mm]	B_i [mm]	B_k [mm]	B_i-grid [mm] X mm	t [mm]	KR [mm]	Additional load ≤ [kg/m]	Cable-d_{max} [mm]
TKHD90											
		RMF	87	117	100 – 800	170 – 870	1	90	250 – 360	100	69

Key for abbreviations on page 60

Design guidelines from page 12

Technical support:
technik@kabelschlepp.de

online-engineer.de
Cable Carrier Configurator

Subject to change.

TKHD series | Overview

Unsupported arrangement			Gliding arrangement			Inner distribution				Installation variants			Page
Travel length ≤ [m]	v_{max} ≤ [m/s]	a_{max} ≤ [m/s²]	Travel length ≤ [m]	v_{max} ≤ [m/s]	a_{max} ≤ [m/s²]	TS0	TS1	TS2	TS3	vertical hanging or standing	lying on the side	rotating arrangement	
13.5	5	2.5	200	2	2.5	●	●	–	–	●	–	–	378

Inner heights

87

Inner widths

100 – 800

tsubaki-kabelschlepp.com/tkhd

Subject to change.

TKHD90

Pitch
90 mm

Inner height
87 mm

Inner widths
100 – 800 mm

Bending radii
250 – 360 mm

Stegbauarten

Aluminum stay RMF ..... page 378

Frame stay, solid

- Aluminum profile bars for heavy loads and large cable carrier widths. Easy threaded connection.
- **Inside/outside:** Threaded joint easy to release.

TOTALTRAX® complete systems

Benefit from the advantages of the TOTALTRAX® complete system. A complete delivery from one source – with a warranty certificate on request! Learn more at **tsubaki-kabelschlepp.com**

TRAXLINE® cables for cable carriers

Hi-flex electric cables which were specially developed, optimised and tested for use in cable carriers can be found at **traxline.de**.

Key for abbreviations on page 60

Design guidelines from page 12

Technical support:
technik@kabelschlepp.de

online-engineer.de
Cable Carrier Configurator

Subject to change.

TKHD90 | Installation dim. | Unsupported · Gliding

Unsupported arrangement

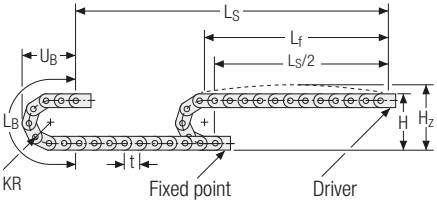

KR [mm]	H [mm]	H_z [mm]	L_B [mm]	U_B [mm]
250	680	860	965	510
310	800	980	1154	570
360	900	1080	1311	620

Load diagram for unsupported length depending on the additional load.

Sagging of the cable carrier is technically permitted for extended travel lengths, depending on the specific application.

Intrinsic cable carrier weight q_k = 10 kg/m. For other inner widths, the maximum additional load changes.

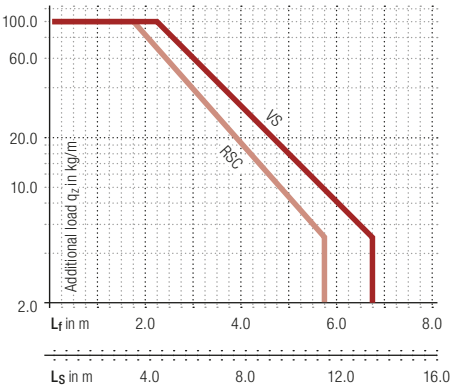

Pre-tensioning of the cable carrier for unsupported arrangement, maximum H_z dimension.

Decreased pre-tensioning of the cable carrier for RSC (rolling system) application, reduced H_z dimension.

Speed
up to 5 m/s

Acceleration
up to 2.5 m/s²

Travel length
up to 13.5 m

Additional load
up to 100 kg/m

Gliding arrangement

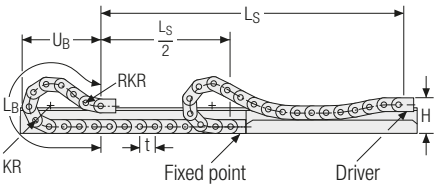

The gliding cable carrier must be guided in a channel. See p. 702.

Glide shoes must be used for gliding applications.

Speed
up to 2 m/s

Acceleration
up to 2.5 m/s²

Travel length
up to 200 m

Additional load
up to 100 kg/m

Our technical support can provide help for gliding arrangements:
technik@kabelschlepp.de

Inner heights
87

Inner widths
100 – 800

tsubaki-kabelschlepp.com/tkhd

Subject to change.

TKHD90 RMF | Dimensions · Technical data

Aluminum stay RMF – frame stay solid

- Aluminum profile bars for heavy loads and large cable carrier widths. Easy threaded connection.
- Available customized in **1 mm grid**.
- **Inside/outside:** Threaded joint easy to release.

Stay arrangement on each chain link **(VS: fully-stayed)**

1 mm B_i 100 – 800 mm in **1 mm width sections**

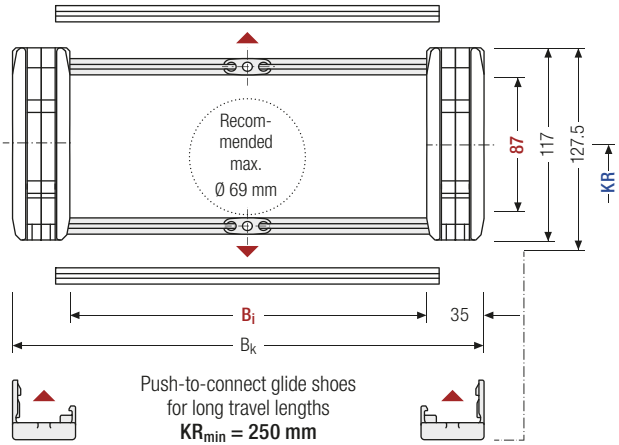

The maximum cable diameter strongly depends on the bending radius and the desired cable type. Please contact us.

Calculating the cable carrier length

Cable carrier length L_k

$$L_k \approx \frac{L_S}{2} + L_B$$

Cable carrier length L_k rounded to pitch t

h_i [mm]	h_G [mm]	$h_{G'}$ [mm]	B_i [mm]*	B_k [mm]	KR [mm]			q_k [kg/m]
87	117	127.5	**100 – 800**	B_i + 70	**250**	**310**	**360**	10.37 – 17.47

* in 1 mm width sections

Order example

TKHD90	.	400	.	RMF	.	310	-	2700	VS
Type		B_i [mm]		Stay variant		KR [mm]		L_k [mm]	Stay arrangement

Key for abbreviations on page 60

Design guidelines from page 12

Technical support:
technik@kabelschlepp.de

online-engineer.de
Cable Carrier Configurator

Subject to change.

TKHD90 RMF | Inner distribution | TS0 · TS1

Divider systems

As a standard, the divider system is mounted on every 2nd chain link on the center bracket.

As a standard, dividers and the complete divider system (dividers with height separations) can be moved in the cross section **(version A)**.

For applications with lateral acceleration and free hanging on the side, the dividers can be attached by simple insertion of a fixing profile into the RMF stay, available as an accessory **(version B)**.

Inner heights

87

Inner widths

100 – 800

Increments

1 mm

Divider system TS0 without height separation

Vers.	$a_{T\,min}$ [mm]	$a_{x\,min}$ [mm]	$a_{c\,min}$ [mm]	$a_{x\,Raster}$ [mm]	$n_{T\,min}$
A	10	20	15	–	–
B	12.5	20	15	5	–

The dividers can be moved within the cross section (version A) or fixed (version B).

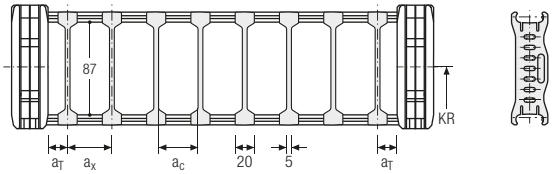

Divider system TS1 with continuous height separation

Vers.	$a_{T\,min}$ [mm]	$a_{x\,min}$ [mm]	$a_{c\,min}$ [mm]	$a_{x\,Raster}$ [mm]	$n_{T\,min}$
A	10	20	15	–	2
B	12.5	20	15	5	2

The dividers can be moved within the cross section (version A) or fixed (version B).

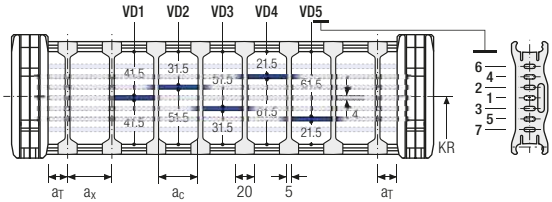

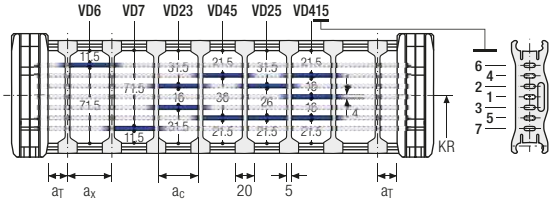

Order example

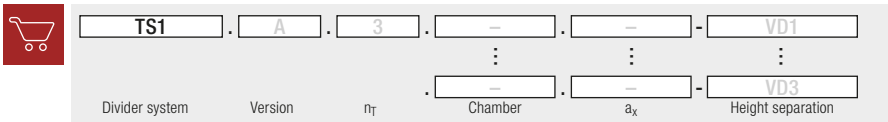

Please state the designation of the divider system **(TS0, TS1 …)**, version and number of dividers per cross section [n_T]. In addition, please also enter the chambers [K] from left to right, as well as the assembly distances [a_T/a_x] (as seen from the driver).

Subject to change.

tsubaki-kabelschlepp.com/tkhd

TKHD90 | End connectors

End connectors – steel

The connection variants on the fixed point and on the driver an be combined and changed later on, if necessary.

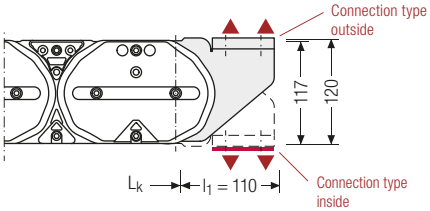

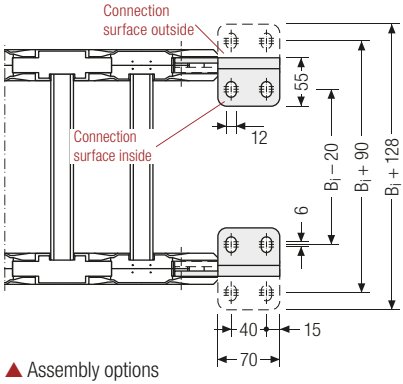

Connection point
- **F** – fixed point
- **M** – driver

Connection surface
- **I** – connection surface inside
- **A** – connection surface outside

Connection type
- **A** – threaded joint to outside (standard)
- **I** – threaded joint to inside

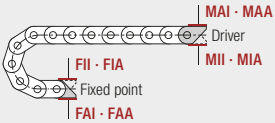

Order example

Steel	.	F	A	I
Steel	.	M	A	I
End connector		Connection point	Connection type	Connection surface

We recommend the use of strain reliefs before driver and fixed point. See from p. 756.

More product information online

Assembly instructions etc.: Additional info via your smartphone or check online at **tsubaki-kabelschlepp.com/support**

Configure your custom cable carrier here: **onlineengineer.de**

Key for abbreviations on page 60
Design guidelines from page 12

Technical support: technik@kabelschlepp.de

online-engineer.de Cable Carrier Configurator

Subject to change.

Subject to change.

tsubaki-kabelschlepp.com/tkhd

100 – 800 Inner widths

87 Inner heights

TKHD series